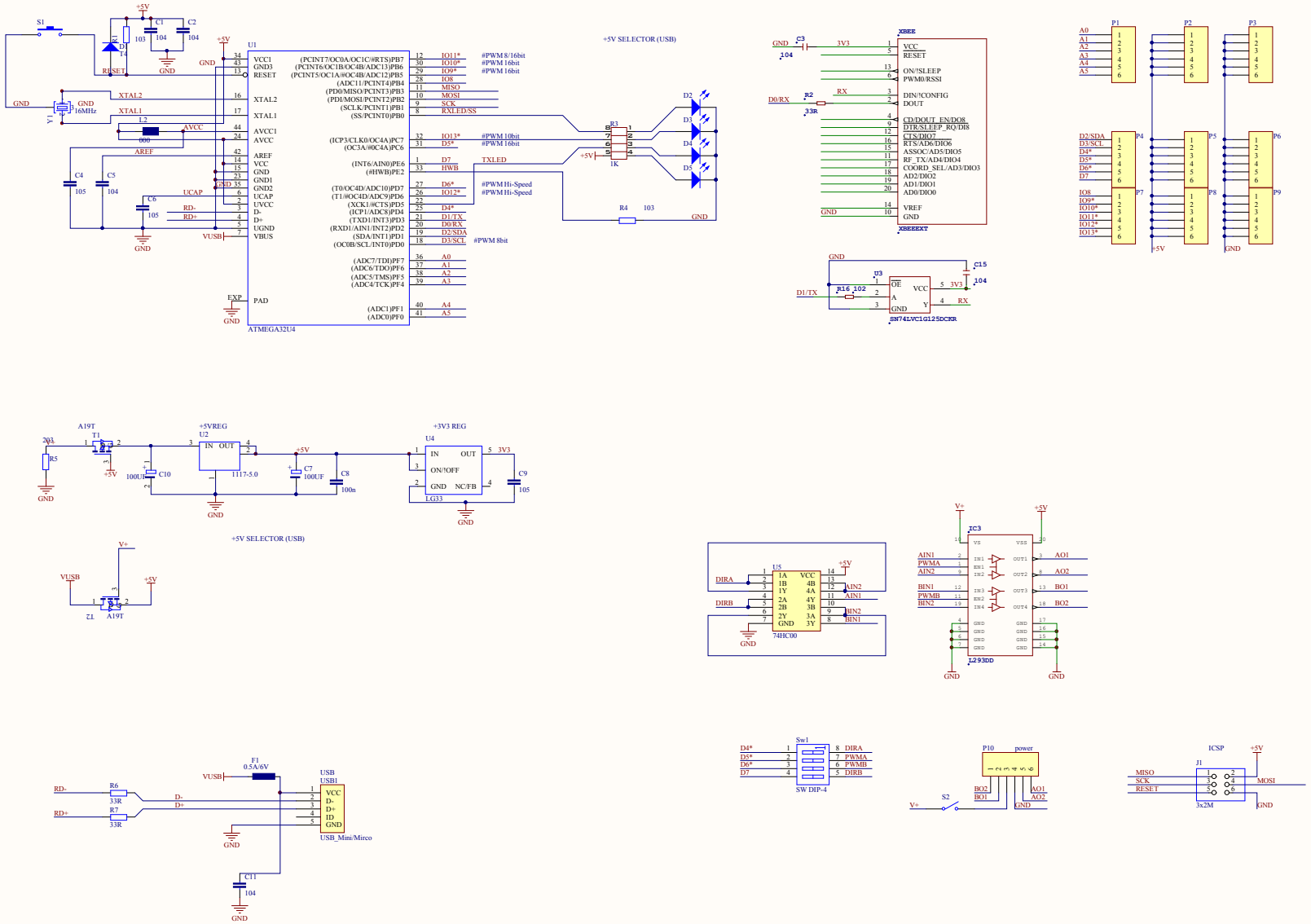

Title		
Size A2	Number	Revision
Date: 2021/12/9	Sheet of	
File: _RLISP004MR.SchDoc	Drawn By:	