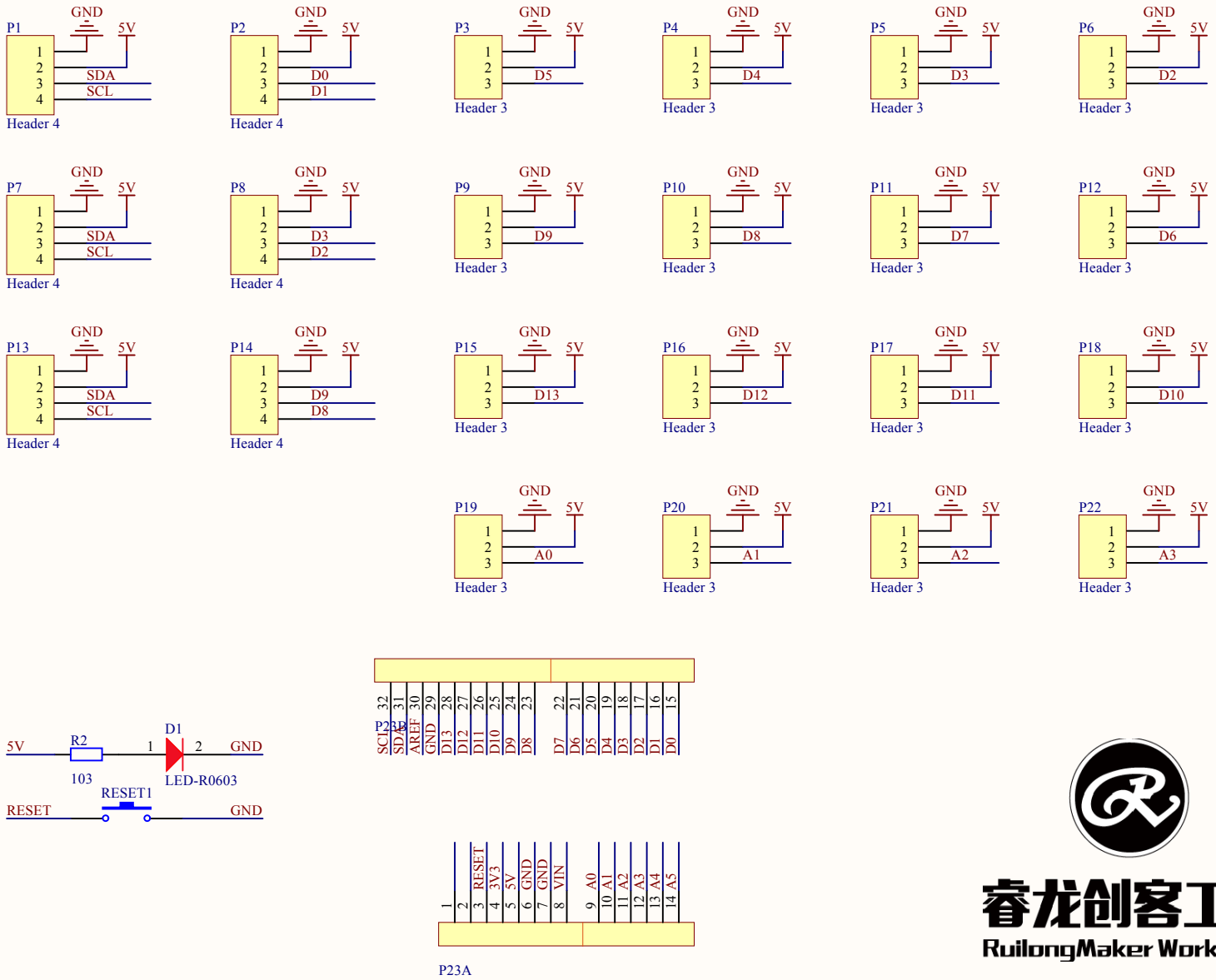

睿龙创客工场
RuilongMaker WorkShop

Title	*UNO R3 Easy IO Shield Board*		*Altium Limited* *3 Minna Close* *Belrose* *NSW 2085* *Australia*
Size: A4	Number:	Revision:	
Date: 2020-04-21	Time: 16:26:27	Sheet of	
File: \\RUILONGMAKER\PCB_Project\Shield\Arduino扩展板\RLSSP006UR\RLSSP006UR.SchDoc			